Installation Guide - Keyed Sideplates; Lever/Knob

EMTEK

1. Door Prep

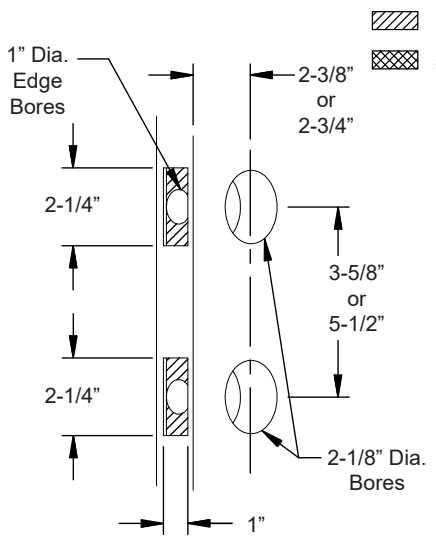

2. Door Jamb Prep

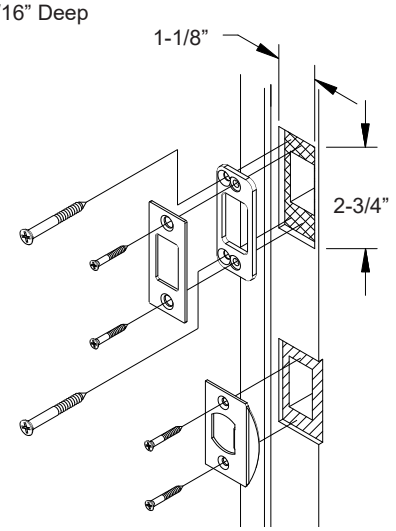

Dummy Function

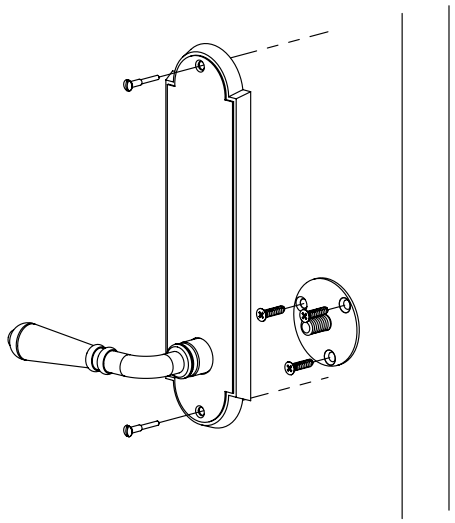

3. Install Bolt and Latch

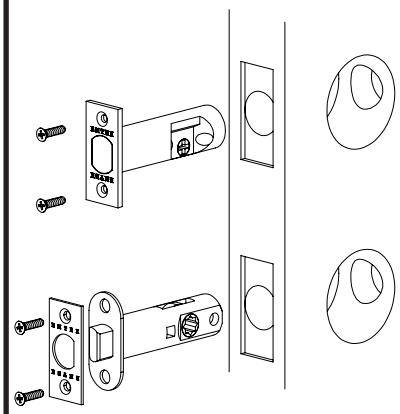

4. Install Outside Trim Plate

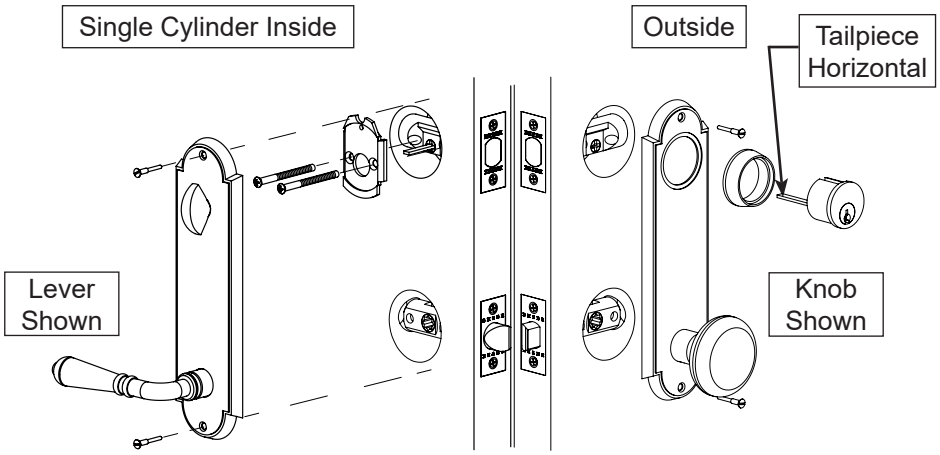

Plates and Lever/Knob vary depending on style

5. Install Inside Trim Plate

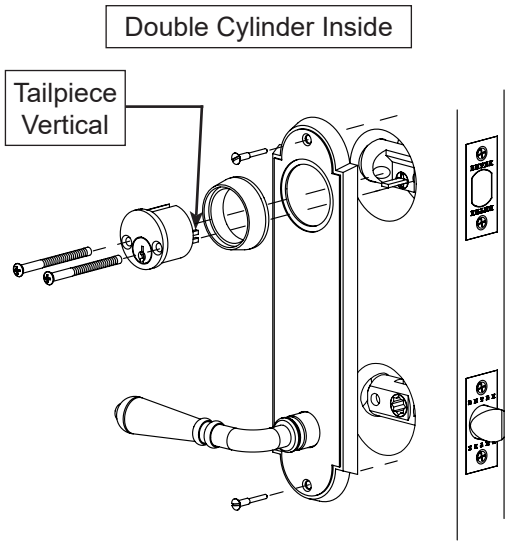

6. Secure Lever/Knob

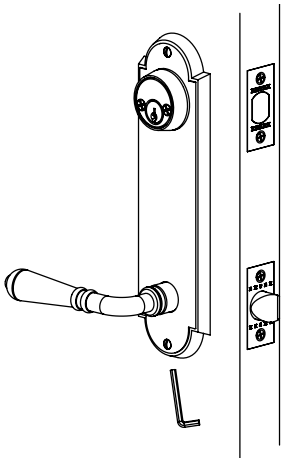

After lock is installed, tighten set screw with hex wrench provided.

Optional Thru Bolts
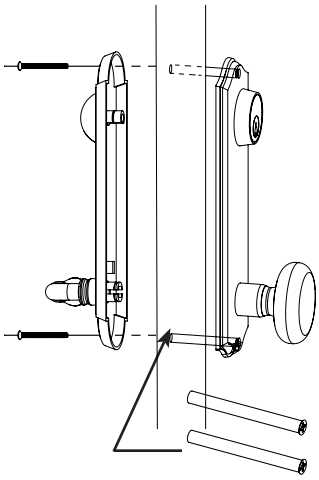
Thru bolts (provided) may be used on hollow doors instead of wood screws (also provided).